HAL4802Programmable Linear Hall-Effect IC

- GaAs + Si Hybrid Programmable Linear Hall-Effect IC
- Single power supply：VDD 3V ~ 5.5V
- Analog Fixed or Ratiometric Output
- Wide ambient Temperature Range : Ta -40℃ ~ 125℃
- Quick response for magnetic field with wide bandwidth
- Programmable via One Wire Interface at Vout Pin

Output Characteristics

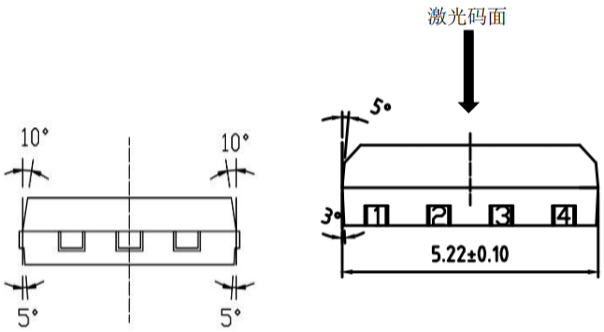

引脚编号 Pinning	引脚名称 Pinning Define
1	VDD
2	GND
3	VOUT
4	VBIAS

Figure1. Definition of sensitivity direction

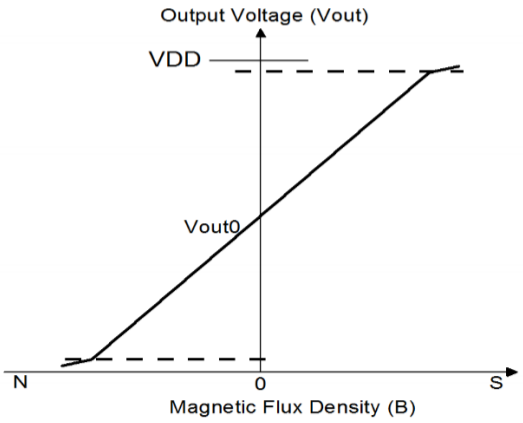

Figure 2. Output Characteristics of HAL4802

Absolute Maximum Rating

Table 1 . HAL4802Working conditions

Characteristics	Symbol	Condition	Min	Typ	Max	Unit
Supply Voltage	V_{DD}	T_a = 25°C	-0.3		6.5	V
Output Current	I_{out}	T_a = 25°C	-45		45	mA
Analog output	V_{out} /V_{bias}	T_a = 25°C	0.4		V_{DD}-0.4	V
Storage Temp.	T_s		-40		150	°C
Operation Temp.	T_a		-40		125	°C

Operation Conditions

Table 2. Electric and magnetic characteristics Ta=-40 to 85°C

Characteristics	Symbol	Condition	Min	Type	Max	Unit
Supply Voltage	V_{DD}	Ta = 25°C	3		5.5	V
Current Consumption	I_s	In Programming @ Ta = 25°C			33	mA
		In normal operation @Ta=25°C		6.5	11	mA
Sensitivity Range	V_{hrange}	Ta = 25°C	0.5		200	mV/mT
Response Time	T_r	M1 C_{load}=20pF			3	μs
Signal bandwidth	B_w			250	500	KHz
Load Capacitance	C_L	Ta = 25°C		20p	1n	F
Bias Voltage	Vbias	Ta = 25°C	2.490		2.510	V
Quiescent Voltage of Differential Output at Ta 25°C	V_0-V_{bias}	M1	-0.01		0.01	V
Quiescent Voltage of Differential Output In -40°C~85°C	V_0-V_{bias}	M1	-0.02		0.02	V

Characteristics	Symbol	Condition	Min	Type	Max	Unit
Quiescent Voltage (fixed output) Ta=25°C	V_0	M1	2.490		2.510	V
Quiescent Voltage (fixed output) In -40°C~85°C	V_0	M1	2.480		2.520	V
Sensitivity drift through temperature (fixed output)	ΔS/S (25°C)	M1 In -40°C~25°C	-1.5		1.5	%
		M1 In 25°C~85°C	-1.5		1.5	%
Output Saturation Voltage	$V_{out\text{-}SatH}$		V_{DD}-0.5			V
	$V_{out\text{-}SatL}$				0.5	V
Error of sensitivity (ratio metric output) In -40°C~85°C	S_{erro}	V_{DD} in range 4.75~5.25V	-0.4		0.4	%
Error of Quiescent Voltage (ratio metric output) In -40°C~85°C	V_{0erro}	V_{DD} in range 4.75~5.25V	-0.3		0.3	%
Linearity Error	ρ	M1	-0.5		0.5	%

Note:

M1 : V_{DD}=5V , V_0=2.500V or V_{bias} , V_{out} = V_0±2.000V@±20mT , sensitivity : 100 mV/mT ;

Characteristics Definitions

1. Sensitivity V_{hrange} [mv/mT].

   Sensitivity is defined as the slope of the approximate straight line calculated by the least square method, using data of OUT voltage (Vout) when the magnetic flux density (B) is swept within the range of input magnetic flux density (Bin).

2. Linearity Error ρ [%F.S.].

   Linearity error is defined as the ratio of the maximum perpendicular deviation (MPD) to the full scale (F.S.), where MFD is the maximum difference between the OUT voltage (Vout) and the approximate straight line calculated in the sensitivity definition. Definition formula is shown in below:

$$\rho = 100 * \frac{MFD}{F.S.} = 100 * \frac{MFD}{V_H - V_L}$$

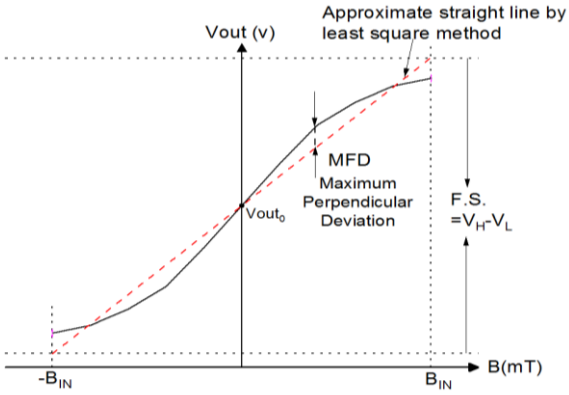

Figure 3. Output characteristics of HAL4802

3. Ratiometric output error of sensitivity V_{0erro} [%] and rationmetric output error of Quiescent voltage S_{erro} [%].

   The quiescent voltage (V_{out0}) of the HAL4802is constant, which means that it does not vary with the VDD. Error of Quiescent Voltage is defined as the difference between the Vh (or V_{out0}) when the VDD is changed from 5.0v to VDD_1 (4.75v<VDD_1<5.25v or 4.5v<VDD_1<5.5v). Definition formula is shown

in blow:

$$S_{erro} = \left[\frac{Vout(VDD)}{Vout(5v)} - \frac{VDD}{5}\right] * 100$$

$$V_{0erro} = \left[\frac{V_0(VDD)}{V_0(5v)} - \frac{VDD}{5}\right] * 100$$

4. Rise response time T_r [μs].

Rise response time is defined as the time delay from the 90% of input magnetic field (B) to the 90% of the OUT voltage (Vout) under the pulse input of magnetic flux density.

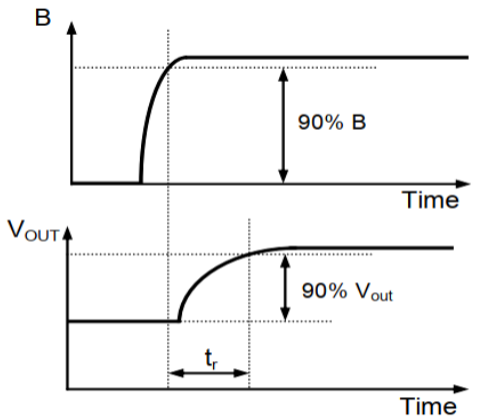

Rise response time (T_r)

Figure 4. Definition of response time

5. Output Saturation Voltage $V_{out\text{-}SatH}$ and $V_{out\text{-}SatL}$.

Output saturation voltage is defined as the saturated output at a fixed output current. $V_{out\text{-}SatH}$ is defined as the chip's output voltage when the output current is -2 or 0.5mA in the positive magnetic field, and $V_{out\text{-}SatL}$ is the chip's output voltage when the output current is -2 or 0.5mA in the negative magnetic field.

Function Block Diagram

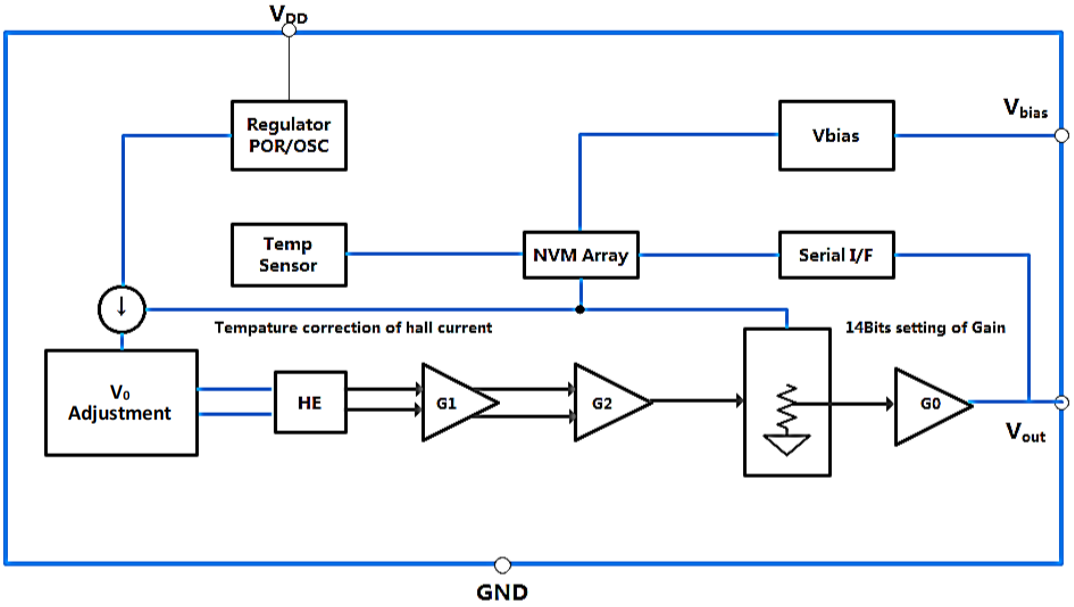

Application Circuit

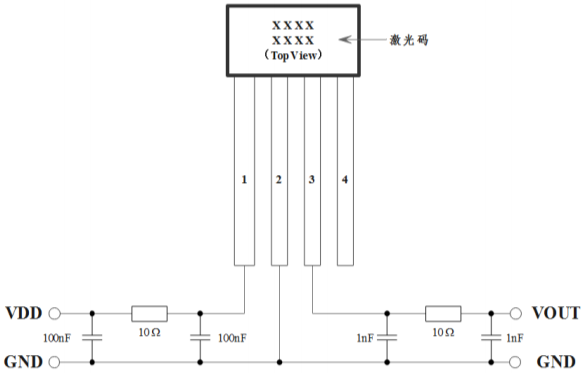

T094UA

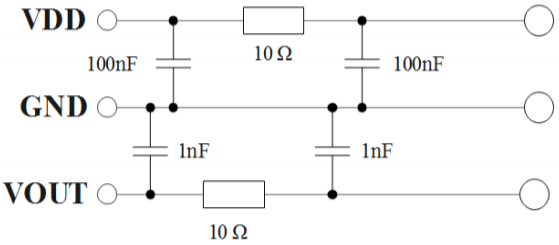

T092UA

Dimensional Drawing (Unit MM)
TO94UA

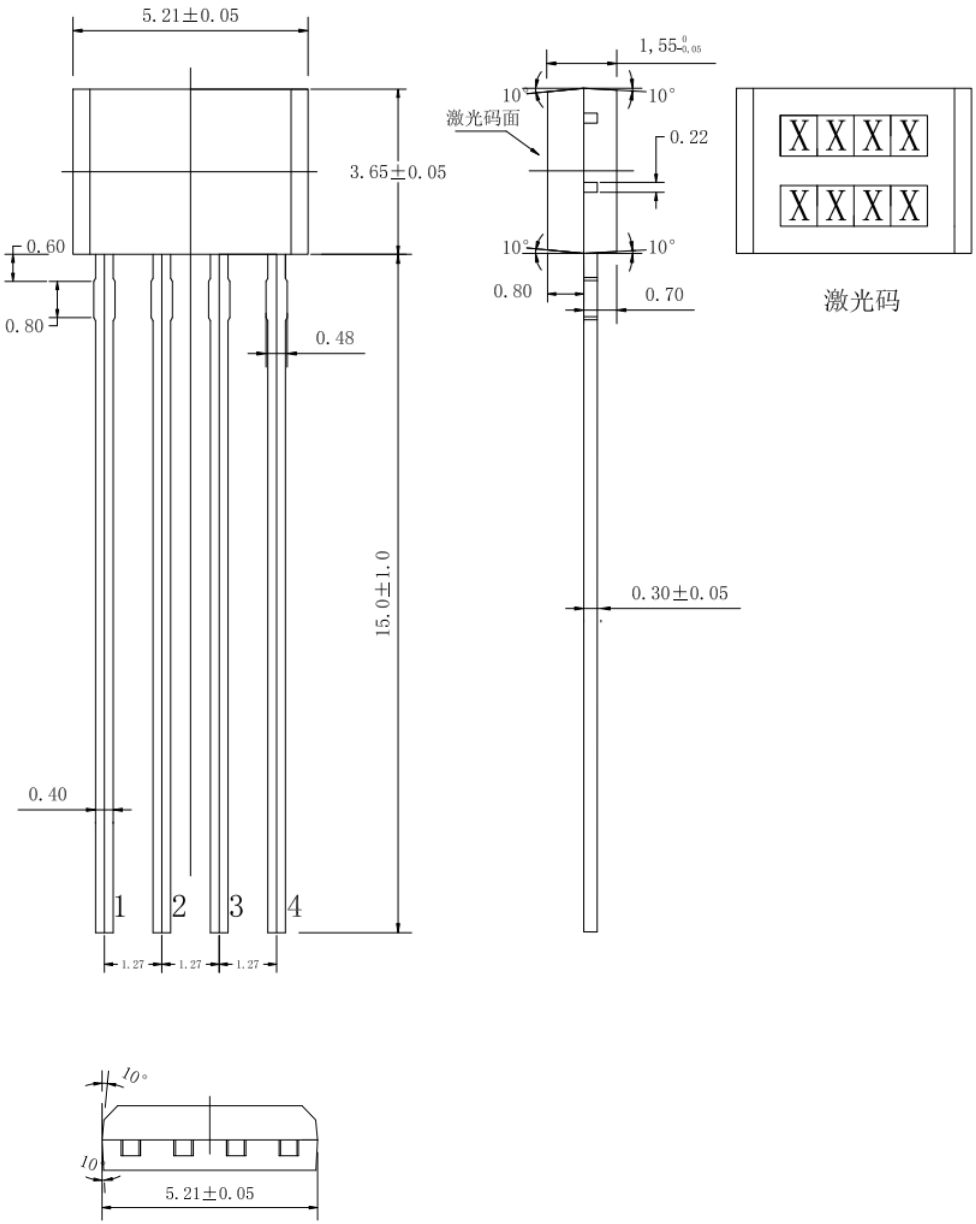
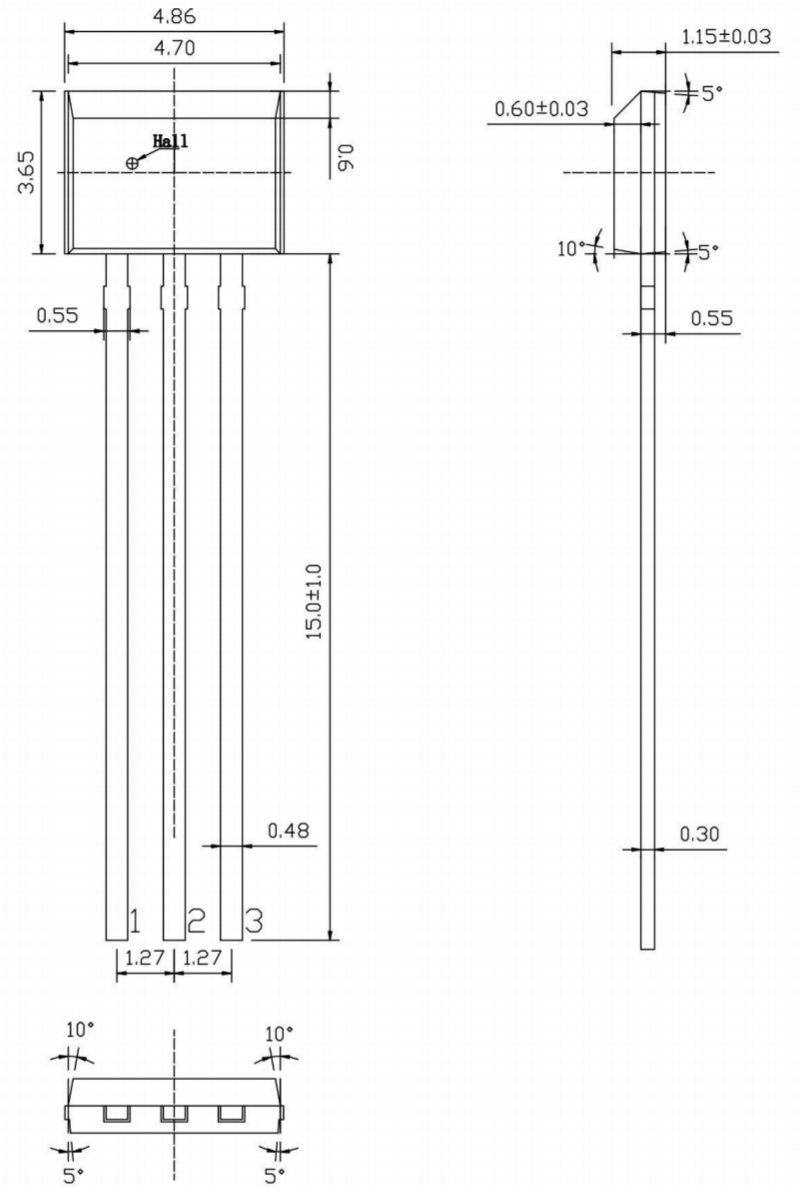
Dimensional Drawing (Unit MM)
TO92UA